KEYSER MODEL KITS

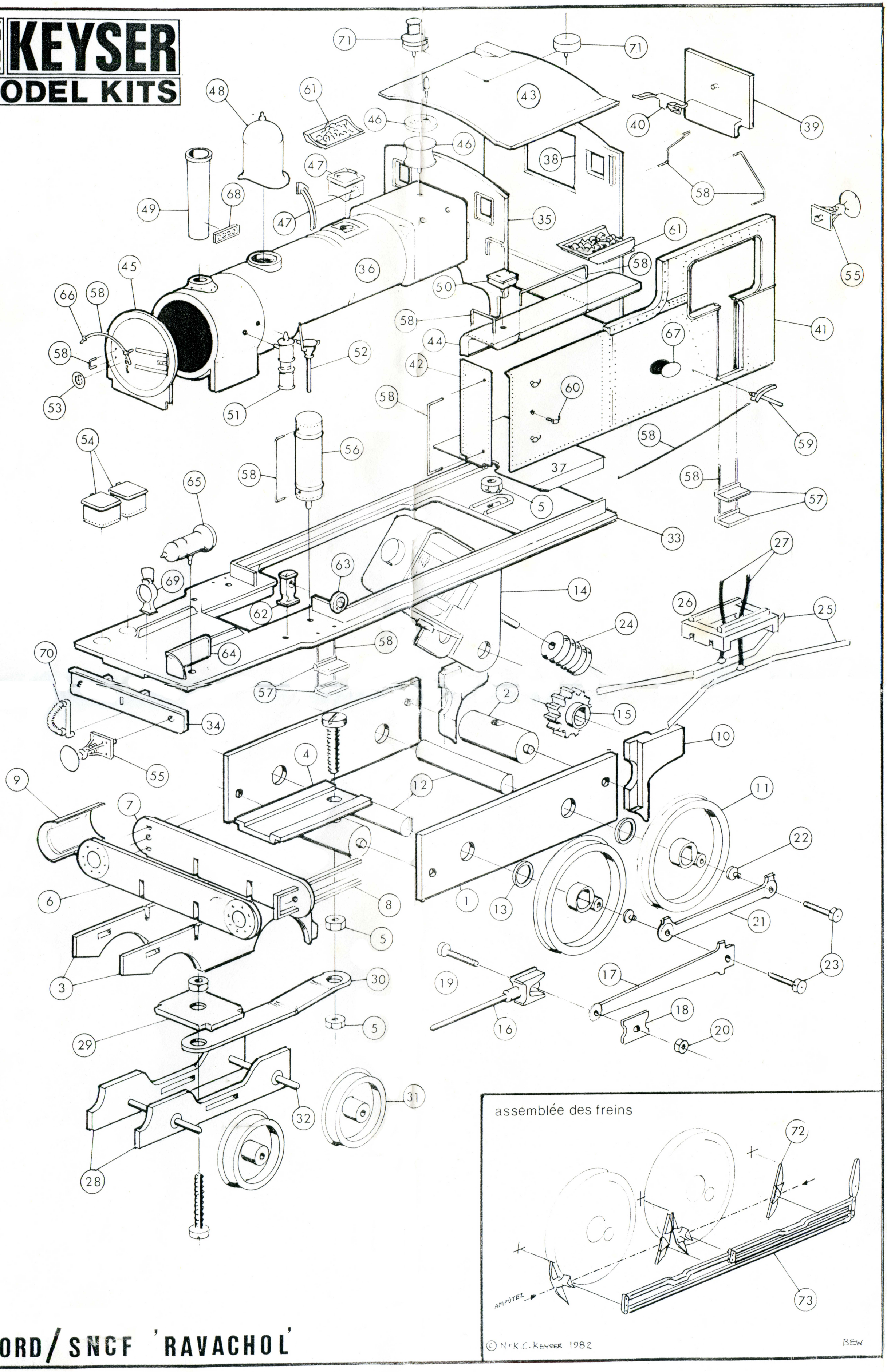

NORD / SNCF 'RAVACHOL'